ENGINE

4D68

CONTENTS

GENERAL INFORMATION 11B- 0- 3
1. SPECIFICATIONS 11B- 1- 1
   GENERAL SPECIFICATIONS 11B- 1- 1
   SERVICE SPECIFICATIONS 11B- 1- 2
   TORQUE SPECIFICATIONS 11B- 1- 5
   SEALANT 11B- 1- 8
2. SPECIAL TOOLS 11B- 2- 1
3. DRIVE BELT AND GLOW PLUG 11B- 3- 1
4. TIMING BELT 11B- 4- 1
5. GLOW PLUGS, FUEL INJECTION PUMP AND INJECTION NOZZLES 11B- 5- 1
6. INTAKE AND EXHAUST MANIFOLDS 11B- 6- 1
7. TURBOCHARGER 11B- 7- 1
8. WATER PUMP, THERMOSTAT, HOSES AND PIPES 11B- 8- 1
9. ROCKER ARMS, ROCKER SHAFT AND CAMSHAFT 11B- 9- 1
10 CYLINDER HEAD, VALVES AND VALVE SPRINGS 11B-10- 1

GENERAL INFORMATION

ENGINE SECTIONAL VIEW

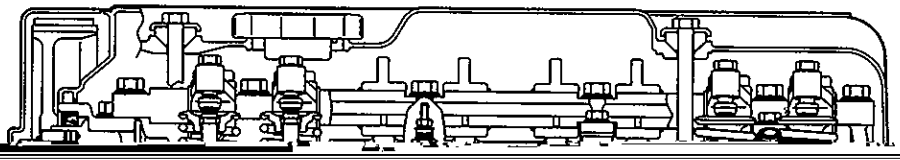

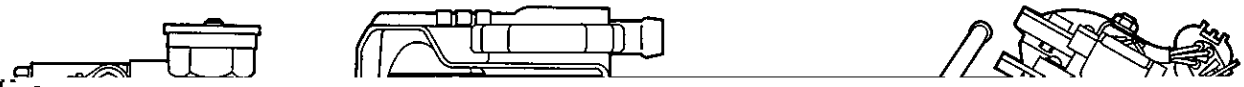

LUBRICATION SYSTEM

NOTES

1. SPECIFICATIONS

GENERAL SPECIFICATIONS

Description	Specifications
Type	Diesel engine
No. and arrangement of cylinders	4 in-line
Combustion chamber	Swirl chamber
Total displacement	1,998 cm^3 (121.9 cu.in.)
Cylinder bore x stroke	82.7 x 93.0 mm (3.26 x 3.66 in.)
Compression ratio	22.4
Valve mechanism	Single overhead camshaft
Rocker arm	Roller follower type

SERVICE SPECIFICATIONS

mm (in.)

	Standard	Limit
Valve spring		
Free height	49.1 (1.934)	48.1 (1.895)
Load/installed height N (kg, lbs.)/mm (in.)	276 (27.6, 61)/40.4 (1.591)	
Out-of squareness	2° or less	Max 4°
Valve guide		
I.D.	8.000 – 8.018 (0.3150 – 0.3157)	
O.D.	13.06 – 13.07 (0.5142 – 0.5146)	
Service size	0.05 (0.002), 0.25 (0.010), 0.50 (0.020) oversize	
Press-in temperature	Room temperature	
Valve seat		
Seat angle	45°	
Valve contact width	0.9 – 1.3 (0.035 – 0.051)	
Valve stem projection	43.45 (1.7106)	43.95 (1.7303)
Service size	0.30 (0.012), 0.60 (0.024) over size	

mm (in.)

	Standard	Limit
Piston pin		
O.D.	24.994 – 25.000 (0.9840 – 0.9843)	
Connecting rod		

TORQUE SPECIFICATIONS

		Torque Nm	kgm	ft.lbs.
Drive belt and glow plug				
Oil level gauge guide bolt	M6	10	1.0	7

	Torque		
	Nm	kgm	ft.lbs.
Air intake fitting bolt	18	1.8	13
Intake fitting stay bolt	18	1.8	13
Intake manifold bracket bolt	14	1.4	11
Relief valve	50	5.0	36
Intake manifold bolt and nut	18	1.8	13
Heat protector bolt			
Engine without turbocharger	30	3.0	22
Engine with turbocharger	14	1.4	11
Exhaust manifold nut			
Engine without turbocharger	[illegible]	[illegible]	[illegible]

	Torque		
	Nm	kgm	ft.lbs.
Front case, silent shaft and oil pan			
Relief plug	45	4.5	33
Oil filter bracket bolt	19	1.9	14
Plug	24	2.4	17
Left silent shaft flange bolt	37	3.7	27
Front case bolt	24	2.4	17
Oil pump cover screw	10	1.0	7
Oil pump cover bolt	17	1.7	12
Check valve	33	3.3	24
Stiffener plate bolt	22	2.2	16
Piston and connecting rod			
Connecting rod cap nut	20+1/4 turns	2.0+1/4 turns	14.5+1/4 turns

SEALANT

	Specified sealant	Quantity
Thermostat housing	Mitsubishi Genuine Part No. MD970389	As required

FORM-IN-PLACE GASKET

The engine has several areas where the form-in-place gasket (FIPG) is in use. To ensure that the gasket fully serves its purpose, it is necessary to observe some precautions when applying the gasket. Bead size, continuity and location are of paramount importance. Too thin a bead could cause leaks. Too thick a bead, on the other hand, could be squeezed out of location, causing blocking or narrowing of the fluid feed line. To

NOTES

2. SPECIAL TOOLS

Tool	Number	Name	Use
	MB990767	End yoke holder	Holding camshaft sprocket or fuel injection pump when loosening or tightening bolts.

Tool	Number	Name	Use
	MD998173 (exhaust) MD998175 (intake)	Valve seat cutter 30°	Correction of valve seat
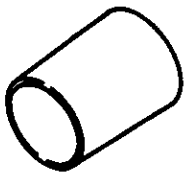	MD998285	Crankshaft front oil seal guide	Guide for installation of crankshaft front oil seal

Tool	Number	Name	Use
	MD998702	Connecting-rod small-end bushing replacement	Replacement of connecting-rod small-end bushing

4. TIMING BELT

REMOVAL AND INSTALLATION

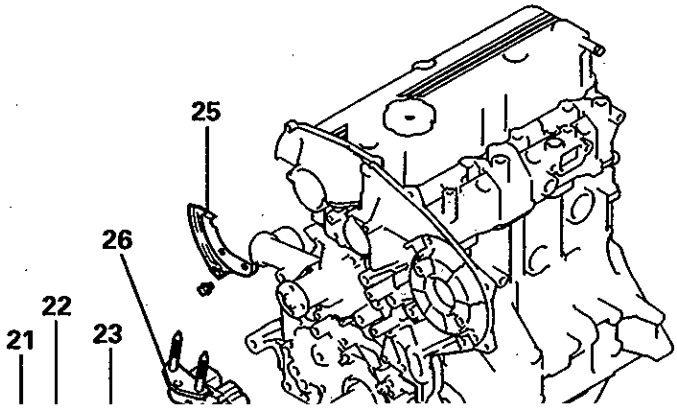

46	4.6	33

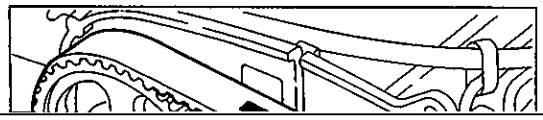

REMOVAL SERVICE POINTS

◊A◊ TIMING BELT REMOVAL

(1) Using chalk, etc., mark an arrow on the back of the timing

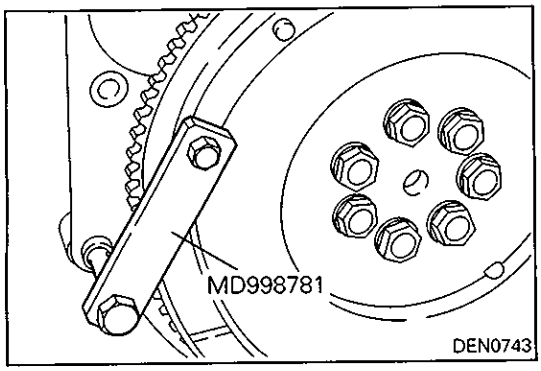

⟨E⟩ CRANKSHAFT BOLT LOOSENING

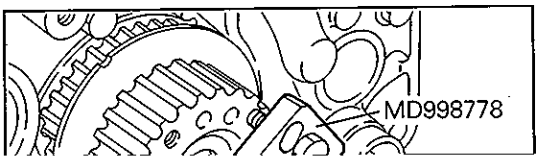

⟨F⟩ CRANKSHAFT SPROCKET REMOVAL

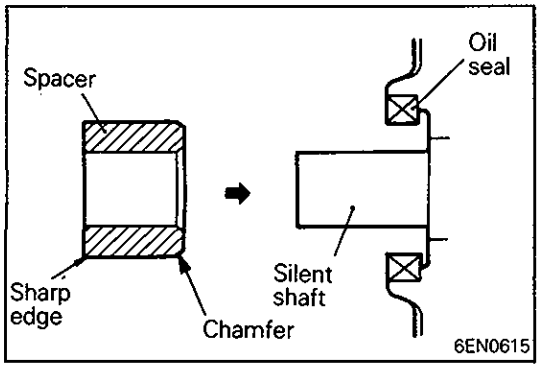

INSTALLATION SERVICE POINTS

◆A◆ SPACER INSTALLATION

(1) Install the spacer with the chamfered end toward the oil seal.

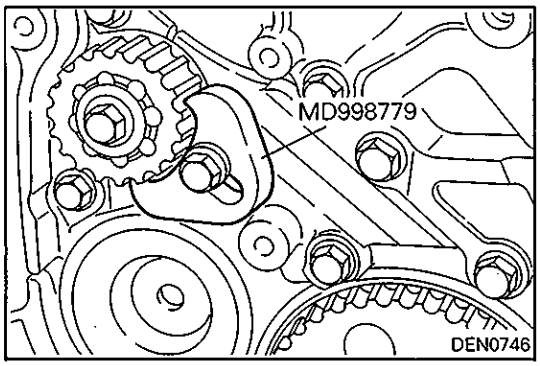

◆B◆ SILENT SHAFT SPROCKET INSTALLATION

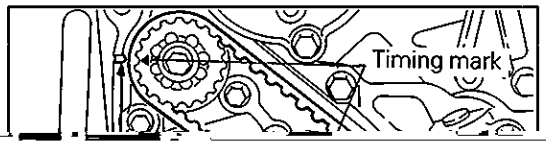

◆C◆ TIMING BELT "B" INSTALLATION

(1) Align the timing marks on the crankshaft sprocket "B" and silent shaft sprocket with the marks on the front case respectively.

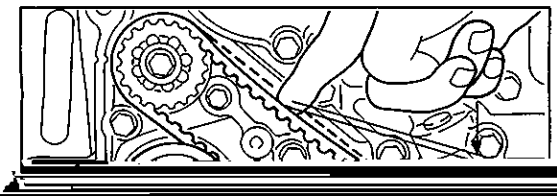

(5) Check to ensure that the timing marks on the sprockets and the front case are in alignment.
(6) Press with index finger the center of span on the tension side of timing belt "B". The bolt must deflect 5 to 7 mm (0.20 to 0.28 in.)

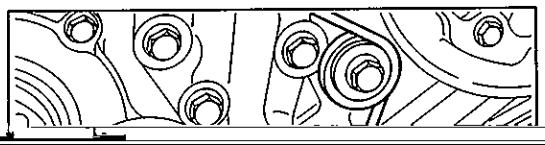

◆H◆ TIMING BELT TENSIONER INSTALLATION

(1) Hook the tensioner spring ends to the engine support bracket projection and the tensioner bracket.

(2) With the timing belt tensioner pushed down, temporarily

(5) Install the timing belt on the sprockets in the following sequence while taking care so that the belt is not slack between sprockets or between sprocket and pulley.

5. GLOW PLUG, FUEL INJECTION PUMP AND INJECTION NOZZLE

REMOVAL AND INSTALLATION

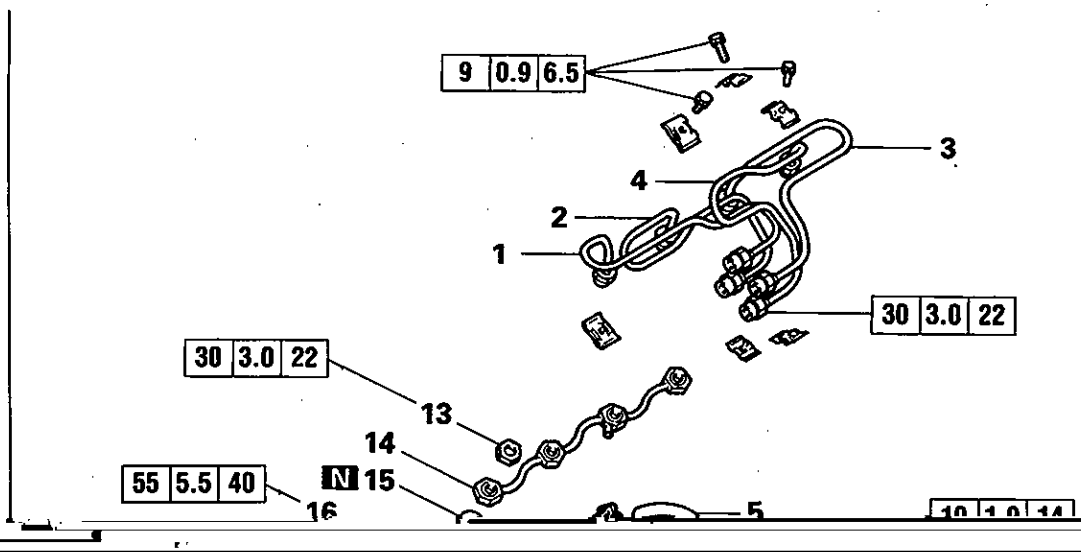

NOTES

6. INTAKE AND EXHAUST MANIFOLDS

REMOVAL AND INSTALLATION

<Engine without turbocharger – C67A>

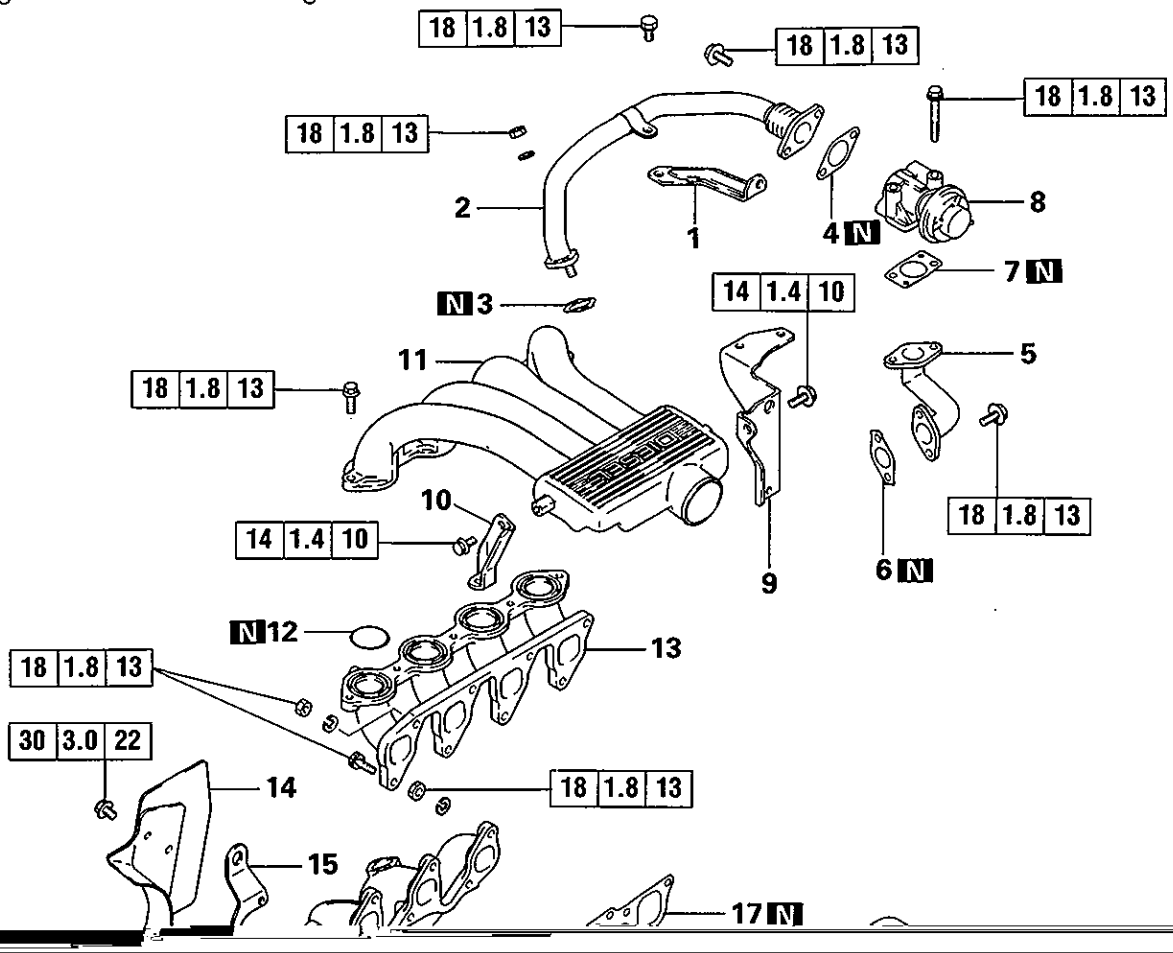

REMOVAL AND INSTALLATION

<Engine with turbocharger (except SPACE RUNNER 1997 models and on)>

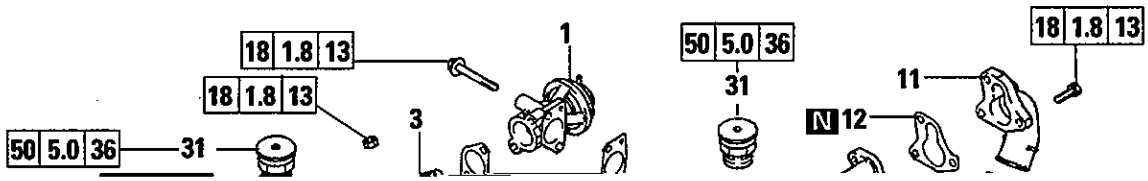

REMOVAL AND INSTALLATION

<SPACE RUNNER 1997 models and on>

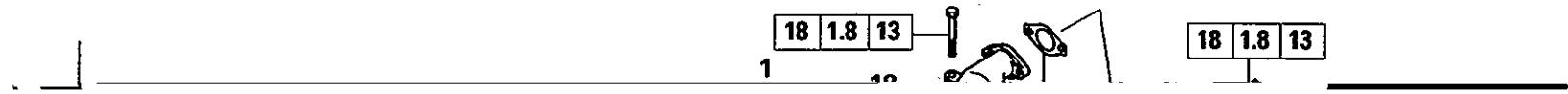

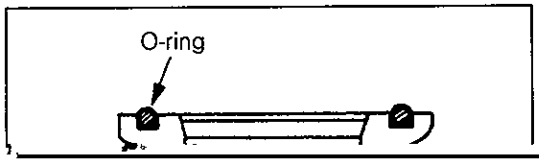

INSTALLATION SERVICE POINTS

▶A◀ O-RING

(1) When installing the intake manifold "A", be sure to fit four O-rings in the intake manifold "B".

NOTES

7. TURBOCHARGER

DISASSEMBLY AND REASSEMBLY

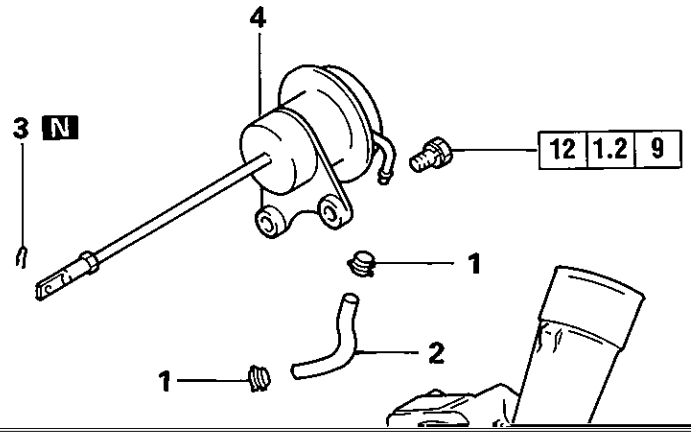

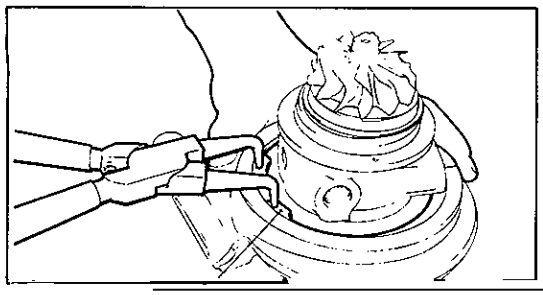

DISASSEMBLY SERVICE POINTS

⟨A⟩ SNAP RING REMOVAL

(1) Lay the unit with the compressor cover side facing down and using snap ring pliers, remove the compressor cover attaching snap ring.

Caution

- **When removing the snap ring, hold it with fingers to prevent it from springing away.**

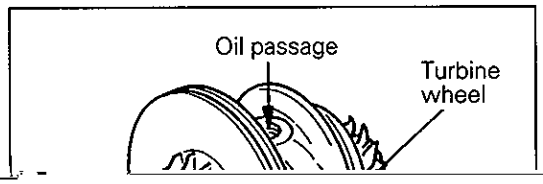

TURBINE WHEEL ASSEMBLY

(1) Check the turbine and compressor wheel blades for bend, burr, damage, corrosion and traces of contact on the back side and replace if defective.
(2) Check the oil passage of the turbine wheel assembly for

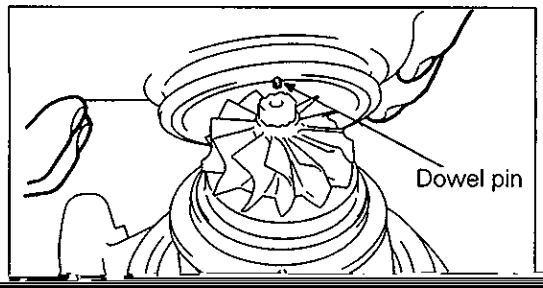

◆D◆ TURBINE HOUSING INSTALLATION

(1) Install the turbine housing while aligning the dowel pin and the hole.

Caution

- **Use care not to damage the blades of the turbine wheel.**

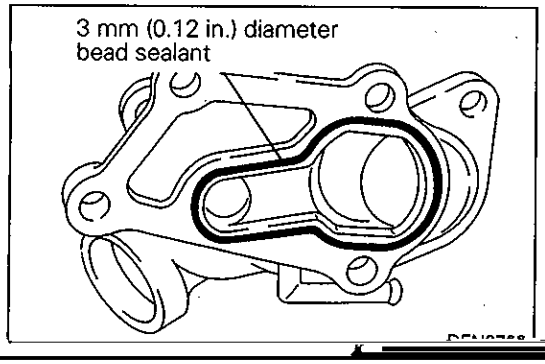

INSTALLATION SERVICE POINTS

◆A◆ SEALANT APPLICATION TO THERMOSTAT HOUSING

Specified sealant:
Mitsubishi Genuine Part No. MD970389 or equivalent

9. ROCKER ARMS, ROCKER SHAFT AND CAMSHAFT

REMOVAL AND INSTALLATION

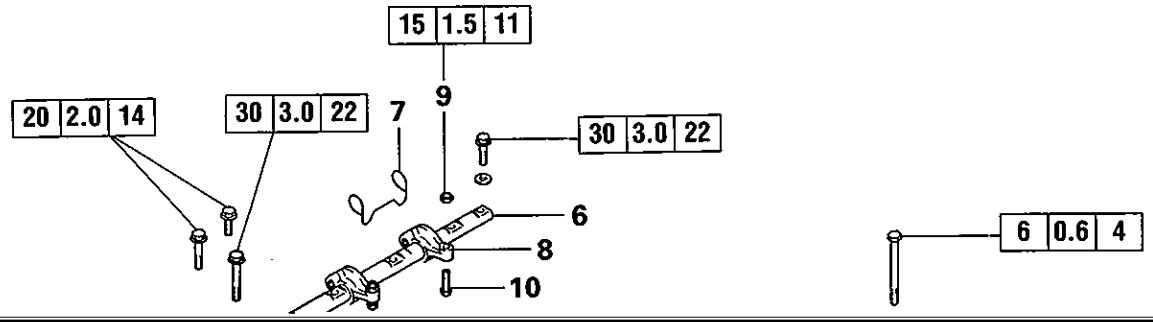

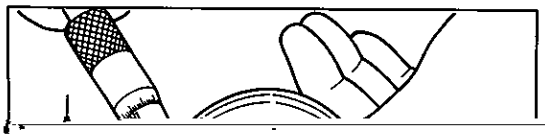

INSPECTION

CAMSHAFT

(1) Measure the cam height

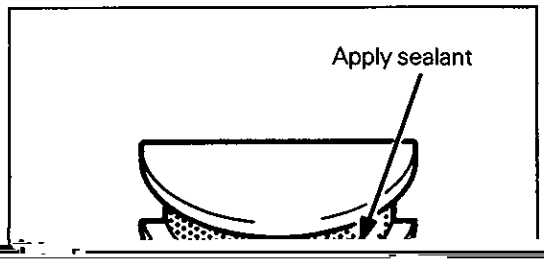

◗D◖ SEMI-CIRCULAR PACKING INSTALLATION

(1) Apply specified sealant to the portions indicated in the illustration.

Specified sealant:
3M ATD Part No. 8660 or equivalent

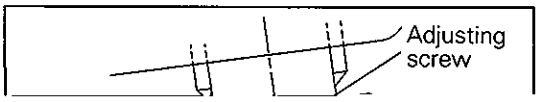

NOTE
Before insertion of a thickness gauge, provide clearance for inserting the gauge by pushing the pad with a standard

10. CYLINDER HEAD, VALVES AND VALVE SPRINGS

REMOVAL AND INSTALLATION

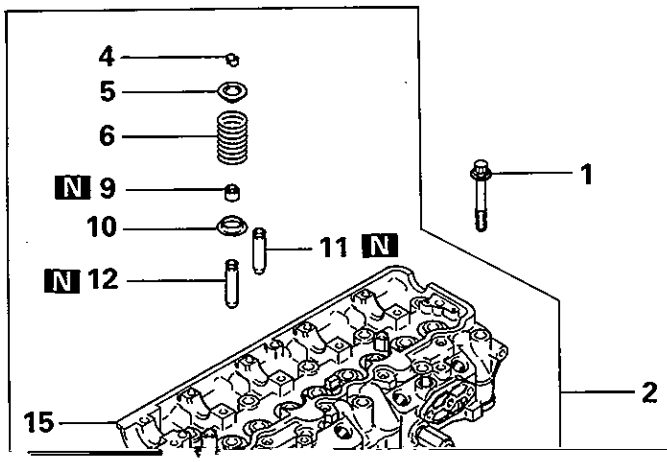

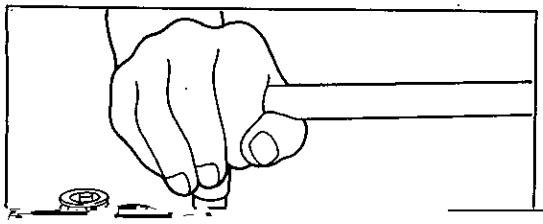

REMOVAL SERVICE POINTS

◇A◇ CYLINDER HEAD BOLT REMOVAL

(1) Using a 12 mm – 12 points socket wrench, loosen the cylinder head bolts.

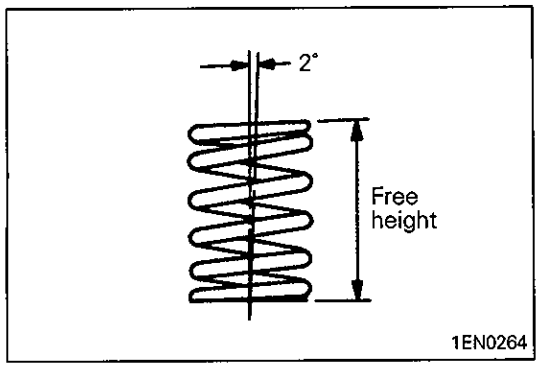

VALVE SPRING

(1) Measure the free height of the spring and, if it is smaller than the limit, replace.

Standard value: 49.1 mm (1.933 in.)
Limit: 48.1 mm (1.894 in.)

(2) Measure the squareness of the spring and, if the limit is exceeded, replace.

Standard value: 2° or less
Limit: Max. 4°

VALVE GUIDE

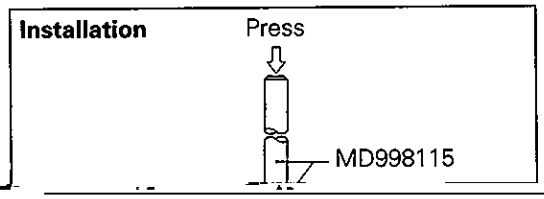

NOTE
Do not install a valve guide of the same size again.

(3) Using the special tool, press-fit the valve guide, working from the cylinder head top surface.

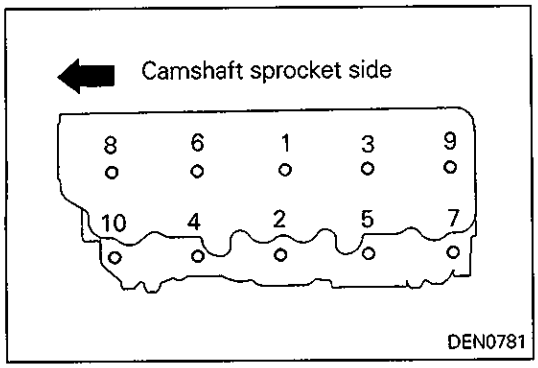

(3) According to the tightening sequence, tighten the bolts to 90 Nm (9.0 kgm, 65 ft.lbs.) using a 12 mm – 12 points socket wrench.
(4) Loosen the bolts completely.
(5) Torque the bolts to 40 Nm (4.0 kgm, 29 ft.lbs.).
(6) Tighten the bolts 1/4 turns (90°) more.
(7) Tighten the bolts 1/4 turns (90°) additionally.

NOTES

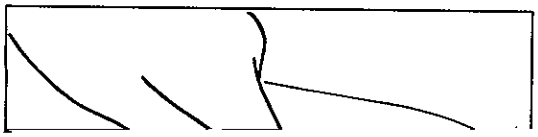

REMOVAL SERVICE POINTS

⟨A⟩ OIL PAN REMOVAL

(1) Knock the special tool deeply between the oil pan and the

12. PISTONS AND CONNECTING RODS

REMOVAL AND INSTALLATION

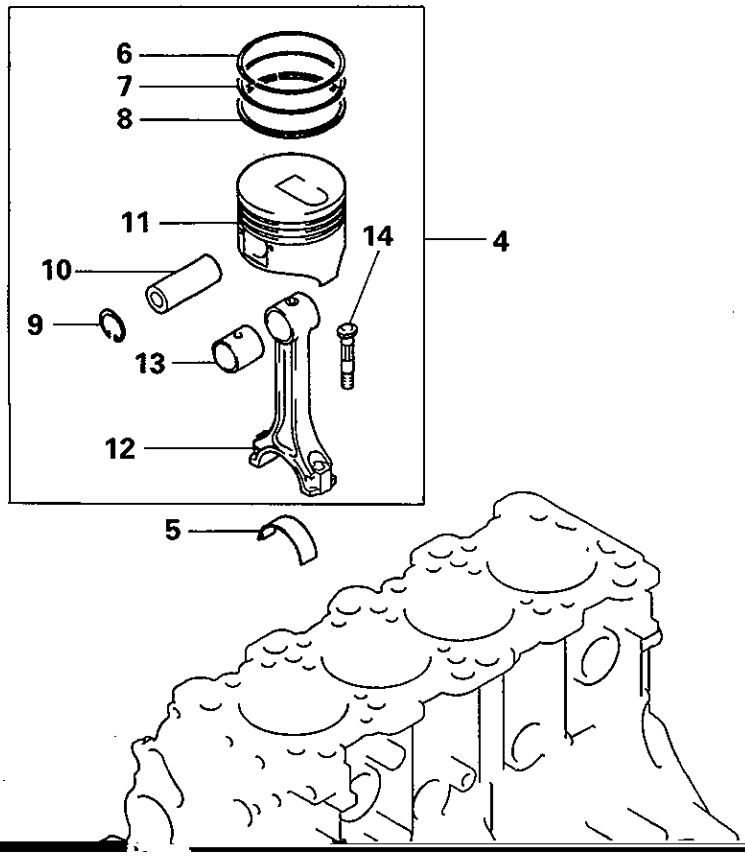

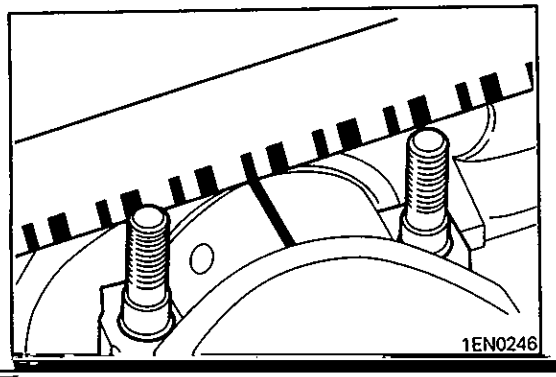

CRANKSHAFT PIN OIL CLEARANCE (PLASTIC GAUGE METHOD)

(1) Remove oil from the crankshaft pin and the connecting rod bearing.
(2) Cut the plastic gauge to the same length as the width of the bearing and place it on the crankshaft pin in parallel with its axis.
(3) Install the connecting rod cap carefully and tighten the bolts to the specified torque.
(4) Carefully remove the connecting rod cap.
(5) Measure the width of the plastic gauge at its widest part by

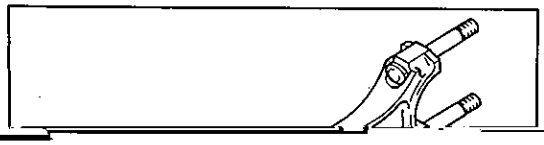

INSTALLATION SERVICE POINTS

◆A◆ PISTON PIN / PISTON / CONNECTING ROD INSTALLATION

NOTES

13. CRANKSHAFT, CYLINDER BLOCK AND FLYWHEEL

REMOVAL AND INSTALLATION

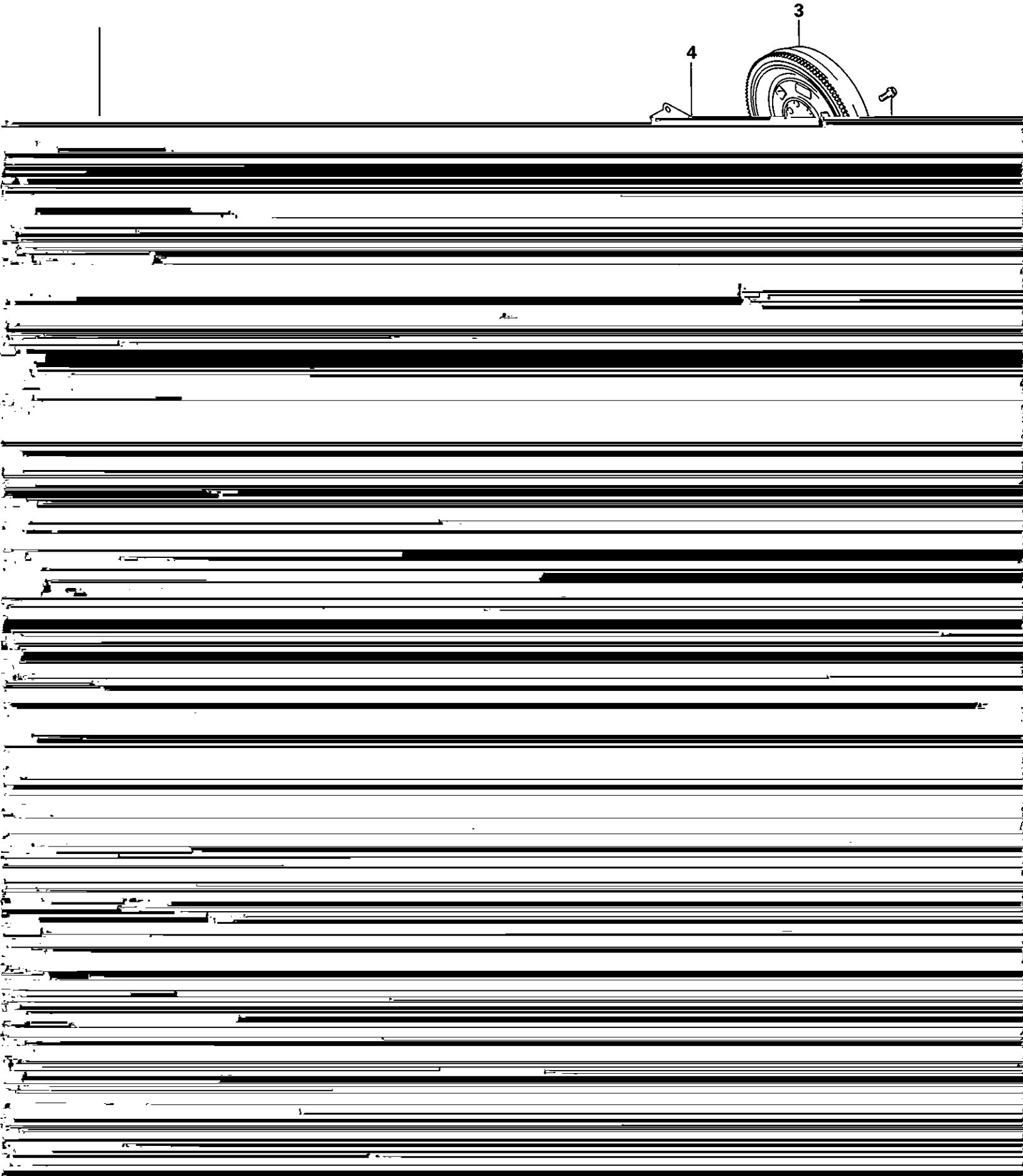

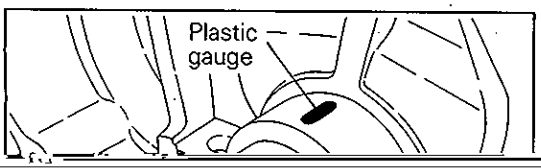

INSPECTION

CRANKSHAFT OIL CLEARANCE (PLASTIC GAUGE METHOD)

(1) Remove oil from the crankshaft journal and the crankshaft

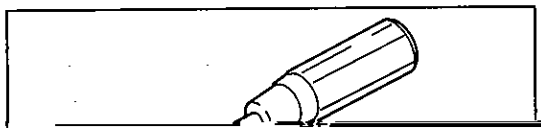

CYLINDER SLEEVE CHANGE PROCEDURES

REMOVAL

(1) Fix the cylinder block to a boring machine and center it.

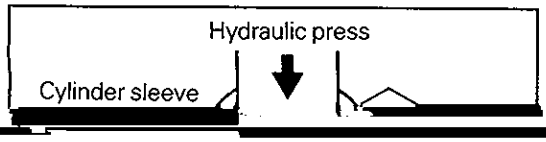

INSTALLATION

When cylinder block sleeve hole has not been bored

When boring the cylinder block sleeve hole

(1) Prepare a cylinder sleeve of 0.5 mm (0.02 in.) oversize (identification color: red)
(2) Hone the cylinder block sleeve hole to 86.13 to 86.15 mm (3.3909 to 3.3917 in.).

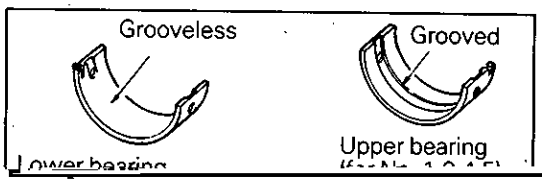

(2) Install the upper crankshaft bearings to the cylinder block. There is an oil groove in the upper crankshaft bearing. There is no difference between upper and lower bearings for the center (with flange).

(3) Install the lower crankshaft bearing (with no oil groove;